Pointwise and distributed delays in impulsive models of endocrine regulation

Alexander Medvedev

Information Technology, Uppsala University, Sweden

alexander.medvedev@it.uu.se

Acknowlegements

- Alexander N. Churilov, Saint Petersburg State University, Russia
- Zhanybai T. Zhusubaliyev, South West State University, Russia
- Per Mattsson, IT UU

Financed by the European Research Council, Advanced Grant 247035 (SysTEAM):
"Systems and Signals Tools for Estimation and Analysis of Mathematical Models in Endocrinology and Neurology "

European Research Council
Established by the European Commission

Outline

Outline

Outline

Outline

Outline

Outline

Outline

Outline

Endocrinology

- A **hormone** is a chemical messenger from one cell (or group of cells) to another.

Endocrinology

- A **hormone** is a chemical messenger from one cell (or group of cells) to another.
- Hormones are produced by nearly **every organ and tissue type** in a multicellular organism.

Endocrinology

- A **hormone** is a chemical messenger from one cell (or group of cells) to another.
- Hormones are produced by nearly **every organ and tissue type** in a multicellular organism.
- Hormones can be secreted in **continuous** (basal) or **pulsatile** (non-basal) manner.

Endocrinology

- A **hormone** is a chemical messenger from one cell (or group of cells) to another.
- Hormones are produced by nearly **every organ and tissue type** in a multicellular organism.
- Hormones can be secreted in **continuous** (basal) or **pulsatile** (non-basal) manner.
- **Endocrinology** deals with disorders of the endocrine system and hormones.

Endocrinology

- A **hormone** is a chemical messenger from one cell (or group of cells) to another.
- Hormones are produced by nearly **every organ and tissue type** in a multicellular organism.
- Hormones can be secreted in **continuous** (basal) or **pulsatile** (non-basal) manner.
- **Endocrinology** deals with disorders of the endocrine system and hormones.
- The use of dynamical **mathematical models and methods** in endocrinology is widespread.

Endocrinology

- A **hormone** is a chemical messenger from one cell (or group of cells) to another.
- Hormones are produced by nearly **every organ and tissue type** in a multicellular organism.
- Hormones can be secreted in **continuous** (basal) or **pulsatile** (non-basal) manner.
- **Endocrinology** deals with disorders of the endocrine system and hormones.
- The use of dynamical **mathematical models and methods** in endocrinology is widespread.
- Analysis of **feedback** phenomena:

Endocrinology

- A **hormone** is a chemical messenger from one cell (or group of cells) to another.
- Hormones are produced by nearly **every organ and tissue type** in a multicellular organism.
- Hormones can be secreted in **continuous** (basal) or **pulsatile** (non-basal) manner.
- **Endocrinology** deals with disorders of the endocrine system and hormones.
- The use of dynamical **mathematical models and methods** in endocrinology is widespread.
- Analysis of **feedback** phenomena:
  - **Estimation** of immeasurable hormone concentrations.

Endocrinology

- A **hormone** is a chemical messenger from one cell (or group of cells) to another.
- Hormones are produced by nearly **every organ and tissue type** in a multicellular organism.
- Hormones can be secreted in **continuous** (basal) or **pulsatile** (non-basal) manner.
- **Endocrinology** deals with disorders of the endocrine system and hormones.
- The use of dynamical **mathematical models and methods** in endocrinology is widespread.
- Analysis of **feedback** phenomena:
  - **Estimation** of immeasurable hormone concentrations.
  - **Control**: artificial pancreas, fertility and hormone replacement therapies.

Endocrinology
Feedback

Endocrine systems are feedback systems

- **Purpose** of the endocrine feedback:

Endocrinology
Feedback

Endocrine systems are feedback systems

- **Purpose** of the endocrine feedback:
  - Keep the concentrations of the involved hormones within a certain domain

Endocrinology
Feedback

Endocrine systems are feedback systems

- **Purpose** of the endocrine feedback:
  - Keep the concentrations of the involved hormones within a certain domain
  - Regulation to a certain oscillative pattern

Endocrinology
Feedback

Endocrine systems are feedback systems

- **Purpose** of the endocrine feedback:
  - Keep the concentrations of the involved hormones within a certain domain
  - Regulation to a certain oscillative pattern
- Hormone secretion **modes**:

Endocrinology
Feedback

Endocrine systems are feedback systems

- **Purpose** of the endocrine feedback:
  - Keep the concentrations of the involved hormones within a certain domain
  - Regulation to a certain oscillative pattern
- Hormone secretion **modes**:
  - Basal: typically modeled by **ordinary** differential equations

Endocrinology
Feedback

Endocrine systems are feedback systems

- **Purpose** of the endocrine feedback:
  - Keep the concentrations of the involved hormones within a certain domain
  - Regulation to a certain oscillative pattern
- Hormone secretion **modes**:
  - Basal: typically modeled by **ordinary** differential equations
  - **Non-basal** (episodic, pulsatile): **hybrid** models

Endocrinology
Feedback

Endocrine systems are feedback systems

- **Purpose** of the endocrine feedback:
  - Keep the concentrations of the involved hormones within a certain domain
  - Regulation to a certain oscillative pattern
- Hormone secretion **modes**:
  - Basal: typically modeled by **ordinary** differential equations
  - **Non-basal** (episodic, pulsatile): **hybrid** models

Endocrinology
Feedback

Endocrine systems are feedback systems

- **Purpose** of the endocrine feedback:
  - Keep the concentrations of the involved hormones within a certain domain
  - Regulation to a certain oscillative pattern
- Hormone secretion **modes**:
  - Basal: typically modeled by **ordinary** differential equations
  - **Non-basal** (episodic, pulsatile): **hybrid** models

Applications of hybrid models in endocrinology

- Current application: regulation of testosterone (Te)

Endocrinology
Feedback

Endocrine systems are feedback systems

- **Purpose** of the endocrine feedback:
  - Keep the concentrations of the involved hormones within a certain domain
  - Regulation to a certain oscillative pattern
- Hormone secretion **modes**:
  - Basal: typically modeled by **ordinary** differential equations
  - **Non-basal** (episodic, pulsatile): **hybrid** models

Applications of hybrid models in endocrinology

- Current application: regulation of testosterone (Te)
- Potential applications:

Endocrinology
Feedback

Endocrine systems are feedback systems

- **Purpose** of the endocrine feedback:
  - Keep the concentrations of the involved hormones within a certain domain
  - Regulation to a certain oscillative pattern
- Hormone secretion **modes**:
  - Basal: typically modeled by **ordinary** differential equations
  - **Non-basal** (episodic, pulsatile): **hybrid** models

Applications of hybrid models in endocrinology

- Current application: regulation of testosterone (Te)
- Potential applications:
  - regulation of cortisol

Endocrinology
Feedback

Endocrine systems are feedback systems

- **Purpose** of the endocrine feedback:
  - Keep the concentrations of the involved hormones within a certain domain
  - Regulation to a certain oscillative pattern
- Hormone secretion **modes**:
  - Basal: typically modeled by **ordinary** differential equations
  - **Non-basal** (episodic, pulsatile): **hybrid** models

Applications of hybrid models in endocrinology

- Current application: regulation of testosterone (Te)
- Potential applications:
  - regulation of cortisol
  - growth hormone

Endocrinology
Feedback

Endocrine systems are feedback systems

- **Purpose** of the endocrine feedback:
  - Keep the concentrations of the involved hormones within a certain domain
  - Regulation to a certain oscillative pattern
- Hormone secretion **modes**:
  - Basal: typically modeled by **ordinary** differential equations
  - **Non-basal** (episodic, pulsatile): **hybrid** models

Applications of hybrid models in endocrinology

- Current application: regulation of testosterone (Te)
- Potential applications:
  - regulation of cortisol
  - growth hormone
  - regulation of the thyroid hormones,

Endocrinology
Feedback

Endocrine systems are feedback systems

- **Purpose** of the endocrine feedback:
  - Keep the concentrations of the involved hormones within a certain domain
  - Regulation to a certain oscillative pattern
- Hormone secretion **modes**:
  - Basal: typically modeled by **ordinary** differential equations
  - **Non-basal** (episodic, pulsatile): **hybrid** models

Applications of hybrid models in endocrinology

- Current application: regulation of testosterone (Te)
- Potential applications:
  - regulation of cortisol
  - growth hormone
  - regulation of the thyroid hormones,
  - modeling of menstrual cycle, etc.

Endocrinology

Regulation of Te

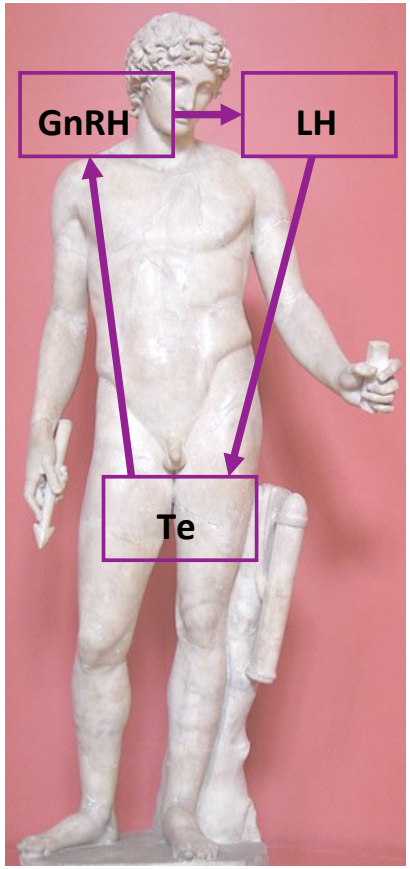

- GnRH is not measurable
- A pulse-modulated feedback from Te to GnRH

- GnRH — gonadropin-releasing hormone (pulses), hypothalamus
- LH — luteinizing hormone, hypophysis
- Te — testosterone, testes

Delays:

- GnRH–LH — 3 min
- LH–Te — 5 min
- Te–GnRH — 3 min
- Te release — 25 min

(Data from: M. Cartwright and M. Husain, 1986)

Endocrinology
LH data

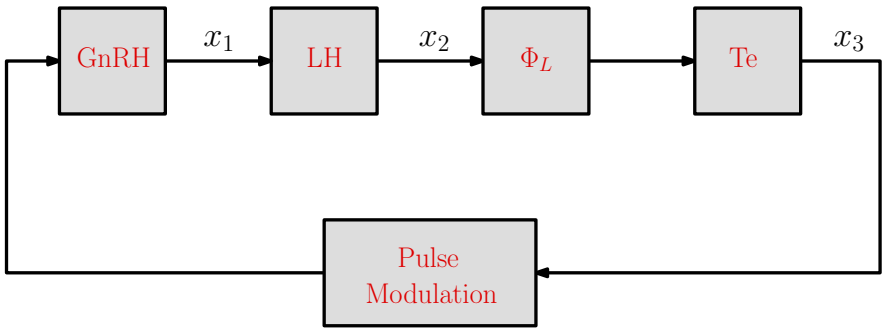

Figure: Block scheme of the hybrid Te regulation model

Endocrinology
LH data

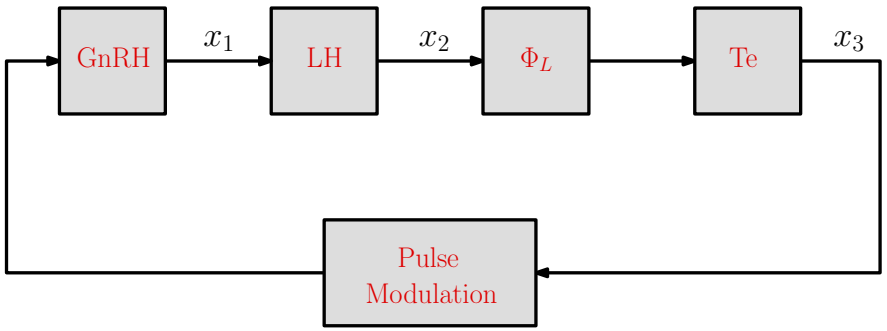

Figure: Block scheme of the hybrid Te regulation model

System identification

Given measured LH and Te concentration

- determine the half-life times of all hormones,

Endocrinology
LH data

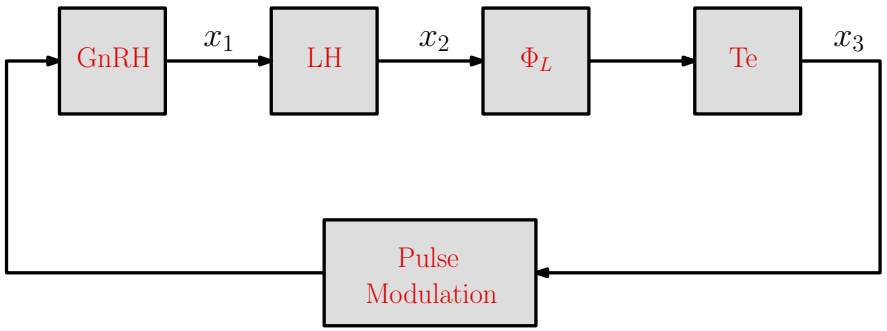

Figure: Block scheme of the hybrid Te regulation model

System identification

Given measured LH and Te concentration

- determine the half-life times of all hormones,
- estimate the parameters of the nonlinear and delayed function Φ_L,

Endocrinology
LH data

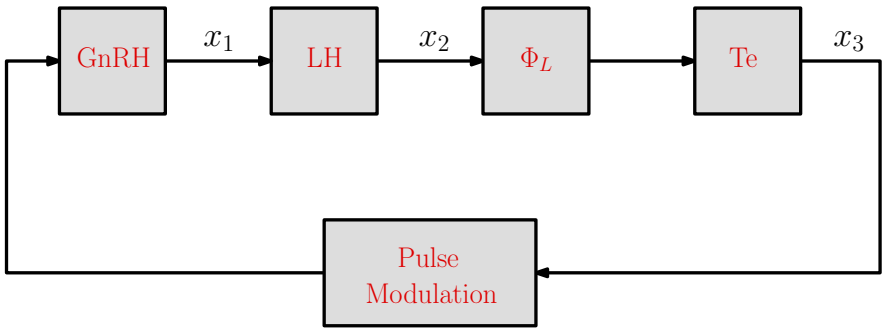

Figure: Block scheme of the hybrid Te regulation model

System identification

Given measured LH and Te concentration

- determine the half-life times of all hormones,
- estimate the parameters of the nonlinear and delayed function Φ_L,
- determine the timing and weights of the GnRH-pulses.

Endocrinology
LH data

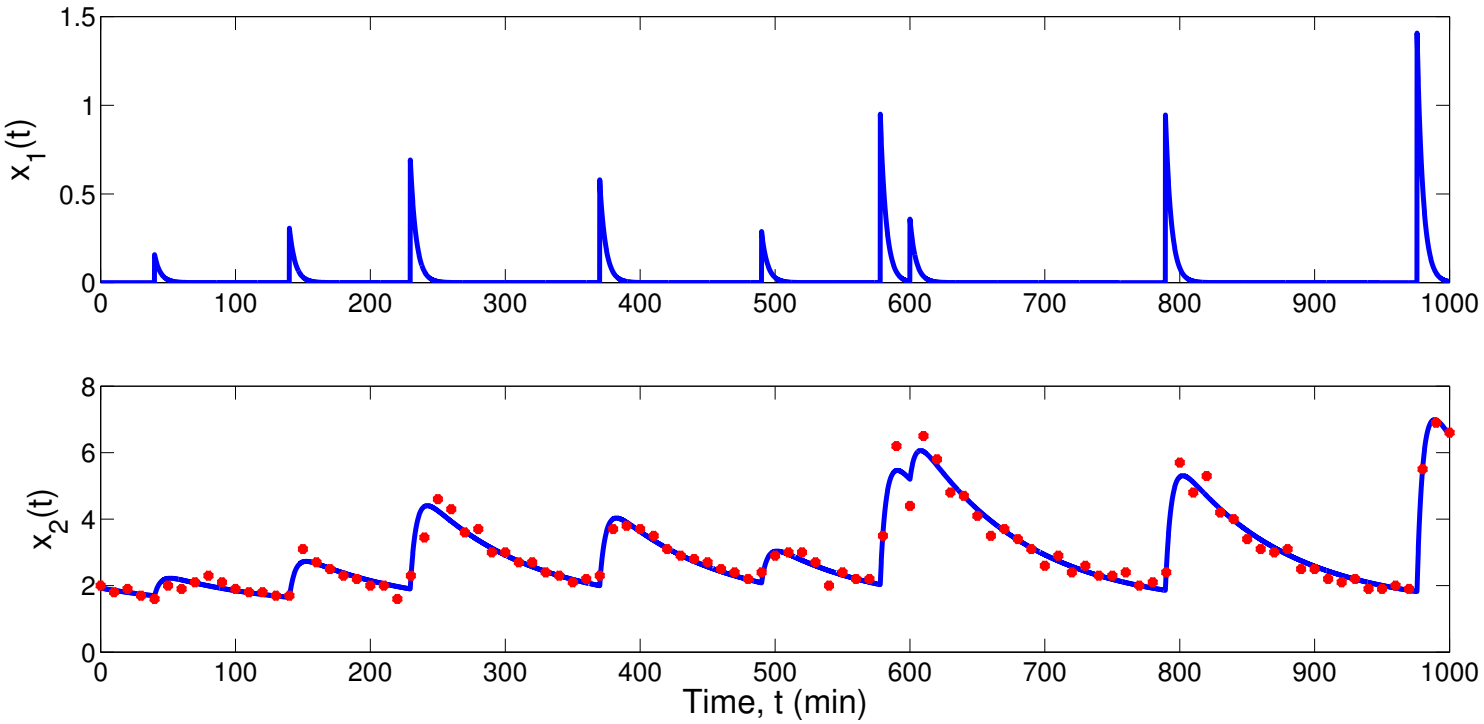

Figure: LH data measured with 10 min sampling in a healthy 27 years old man (red). Estimated GnRH and simulated LH (blue)

Endocrinology

Te data

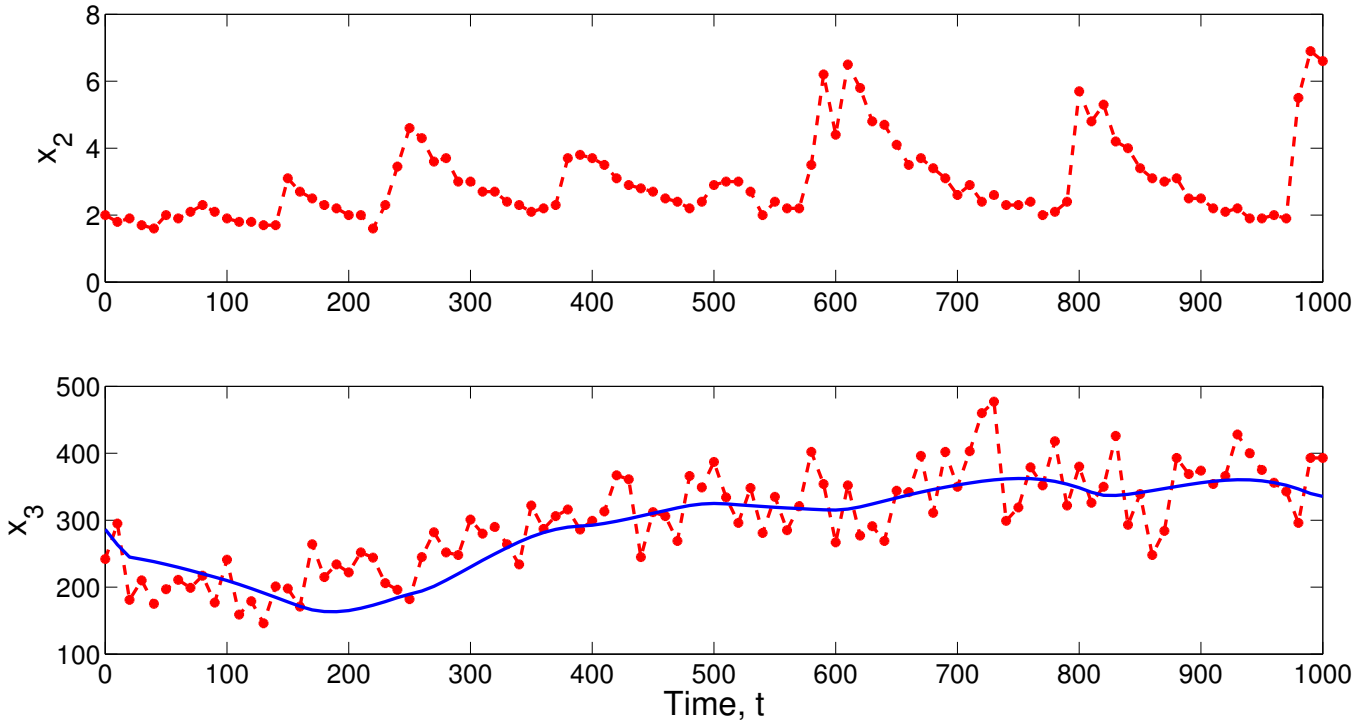

Figure: LH (upper plot) and Te (lower plot) data measured with 10 min sampling in a healthy 27 years old man (red). Estimated GnRH and simulated LH (blue)

Endocrinology
Closed-loop behavior of Te

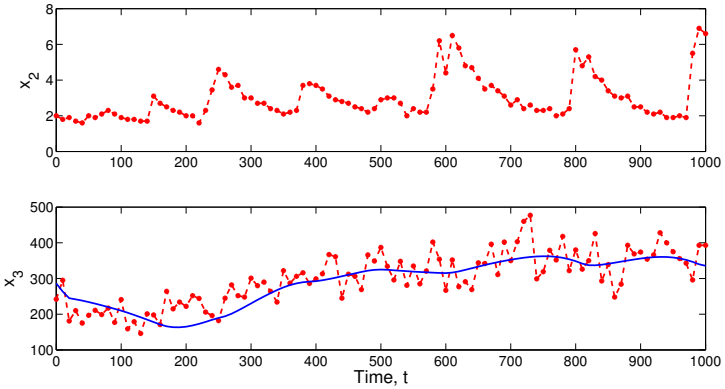

Figure: Measured LH and Te in a healthy 27 years old man (red). Simulated Te, using measured LH as input (blue). Amplitude variations due to circadian rhythm.

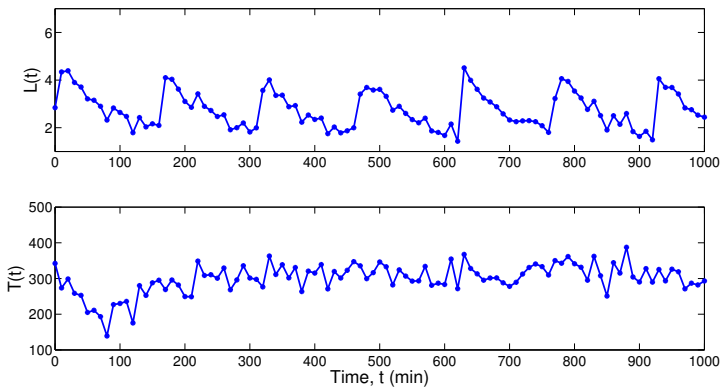

Figure: Simulation of LH (upper plot) and Te (lower plot) in the closed-loop system (noise added to simulated Te). Circadian rhythm is not part of the model

Goodwin oscillator and Smith model

Goodwin oscillator is a generic mathematical model proposed by Goodwin [1965] to describe oscillatory phenomena in biochemistry.

Goodwin oscillator (continuous) with time delay

$$\dot{x} = -b_1 x + f(z), \quad \dot{y} = -b_2 y + g_1 x, \quad \dot{z} = -b_2 z + g_2 y(t-\tau).$$

where x, y, z are the states, $f(\cdot)$ is a nonlinear function, and b_1, b_2, b_3, g_1, g_2, τ are positive parameters.

Goodwin oscillator and Smith model

Goodwin oscillator is a generic mathematical model proposed by Goodwin [1965] to describe oscillatory phenomena in biochemistry.

Goodwin oscillator (continuous) with time delay

$$\dot{x} = -b_1 x + f(z), \quad \dot{y} = -b_2 y + g_1 x, \quad \dot{z} = -b_2 z + g_2 y(t-\tau).$$

where x, y, z are the states, $f(\cdot)$ is a nonlinear function, and b_1, b_2, b_3, g_1, g_2, τ are positive parameters.

- The Goodwin oscillator was adopted in Smith [1980] (with delay [1983]) to describe periodic behaviors in endocrine systems (Smith model).

B. C. Goodwin. Oscillatory behavior in enzymatic control processes. In G. Weber, editor, *Advances of Enzime Regulation*, v.3, pp. 425438. Pergamon, Oxford, 1965.

W. R. Smith. Hypothalamic regulation of pituitary secretion of lutheinizing hormone: Feedback control of gonadotropin secretion. *Bull. Math. Biol.*, 42:5778, 1980.

Impulsive time-delay Smith model

Te regulation

Continuous part

Consider an impulsive time delay system

$$\dot{x} = -b_1 x, \quad \dot{y} = -b_2 y + g_1 x, \quad \dot{z} = -b_2 z + g_2 y(t-\tau). \tag{1}$$

where x, y, z are the concentrations of GnRH, LH and Te, respectively, and b_1, b_2, b_3, g_1, g_2, τ are positive parameters.

Impulsive time-delay Smith model

Te regulation

Continuous part

Consider an impulsive time delay system

$$\dot{x} = -b_1 x, \quad \dot{y} = -b_2 y + g_1 x, \quad \dot{z} = -b_2 z + g_2 y(t-\tau). \tag{1}$$

where x, y, z are the concentrations of GnRH, LH and Te, respectively, and b_1, b_2, b_3, g_1, g_2, τ are positive parameters.

Discrete part

The GnRH concentration $x(t)$ undergoes jumps at the time instants t_k:

$$x(t_k^+) = x(t_k^-) + \lambda_k, \quad t_{k+1} = t_k + T_k, \quad k = 0, 1, 2, \ldots, \tag{2}$$

where

$$\lambda_k = F(z(t_k)), \quad T_k = \Phi(z(t_k)), \tag{3}$$

$F(\cdot)$, $\Phi(\cdot)$ are the that are positive and bounded amplitude and frequency modulation functions, $F(\cdot)$ is decreasing and $\Phi(\cdot)$ is increasing. The superscripts "$\pm$" denote the left-side and the right-side limits, respectively. Without the loss of generality $t_0 = 0$.

Continuous vs Impulsive Smith model

Continuous Smith model, properties

- Does not capture pulsatile secretion of release hormones
- Oscillations only for steep feedback nonlinearities $f(\cdot)$
- Boundedness of the solutions cannot be guaranteed

Continuous vs Impulsive Smith model

Continuous Smith model, properties

- Does not capture pulsatile secretion of release hormones
- Oscillations only for steep feedback nonlinearities $f(\cdot)$
- Boundedness of the solutions cannot be guaranteed

Impulsive Smith model, properties

- Explicitly describes pulsatile secretion of release hormones
- Only periodic oscillations, chaotic or quasi-periodic solutions (no equilibria, only hidden attractors)
- Boundedness of the solutions

Time delays
Small and large

- Continuous systems: (time delay)/(time constant) ratio

Time delays
Small and large

- Continuous systems: (time delay)/(time constant) ratio
- Discrete systems: (time delay)/(sampling time) ratio

Time delays
Small and large

- Continuous systems: (time delay)/(time constant) ratio
- Discrete systems: (time delay)/(sampling time) ratio
- Hybrid systems?

Time delays
Small and large

- Continuous systems: (time delay)/(time constant) ratio
- Discrete systems: (time delay)/(sampling time) ratio
- Hybrid systems?

Time delays
Small and large

- Continuous systems: (time delay)/(time constant) ratio
- Discrete systems: (time delay)/(sampling time) ratio
- Hybrid systems?

Impulsive systems:

- Small delay: $\inf_z \Phi(z) > \tau \implies T_k > \tau, \quad \forall k \geqslant 1.$
- Large delay: $2\inf_z \Phi(z) > \tau \geqslant \inf_z \Phi(z) \implies T_k + T_{k-1} > \tau \geqslant T_k, \quad \forall k \geqslant 1.$

Time delays
Small and large

- Continuous systems: (time delay)/(time constant) ratio
- Discrete systems: (time delay)/(sampling time) ratio
- Hybrid systems?

Impulsive systems:

- Small delay: $\inf_z \Phi(z) > \tau \implies T_k > \tau, \quad \forall k \geqslant 1.$
- Large delay: $2\inf_z \Phi(z) > \tau \geqslant \inf_z \Phi(z) \implies T_k + T_{k-1} > \tau \geqslant T_k, \quad \forall k \geqslant 1.$

Important observation

- Small delays in the Te regulation model do not contribute new types of system behaviors compared to the delay-free case

Time delays

Small and large

- Continuous systems: (time delay)/(time constant) ratio
- Discrete systems: (time delay)/(sampling time) ratio
- Hybrid systems?

Impulsive systems:

- Small delay: $\inf_z \Phi(z) > \tau \implies T_k > \tau, \quad \forall k \geqslant 1.$
- Large delay: $2\inf_z \Phi(z) > \tau \geqslant \inf_z \Phi(z) \implies T_k + T_{k-1} > \tau \geqslant T_k, \quad \forall k \geqslant 1.$

Important observation

- Small delays in the Te regulation model do not contribute new types of system behaviors compared to the delay-free case
- Large delays in the Te regulation model lead to nonlinear (non-smooth) phenomena that are not observed in the delay-free case

Delays in endocrine models

- Transport phenomena

Time delays
Point-wise and distributed

Delays in endocrine models

- Transport phenomena
- Ligand-receptor interaction

Time delays
Point-wise and distributed

Delays in endocrine models

- Transport phenomena
- Ligand-receptor interaction
- Time necessary for hormone production

Time delays
Point-wise and distributed

Delays in endocrine models

- Transport phenomena
- Ligand-receptor interaction
- Time necessary for hormone production

Time delays
Point-wise and distributed

Delays in endocrine models

- Transport phenomena
- Ligand-receptor interaction
- Time necessary for hormone production

$$x_\tau(t) = \int_0^\tau K(s)x(t-s)\,ds,$$

$K(t)$ is a integrable kernel function with support on $[0,\tau]$, for $\tau > 0$.

Important special cases

- $K(t) = \delta(t)$ – pointwise delay (formally)

Time delays
Point-wise and distributed

Delays in endocrine models

- Transport phenomena
- Ligand-receptor interaction
- Time necessary for hormone production

$$x_\tau(t) = \int_0^\tau K(s)x(t-s)\,ds,$$

$K(t)$ is a integrable kernel function with support on $[0,\tau]$, for $\tau > 0$.

Important special cases

- $K(t) = \delta(t)$ – pointwise delay (formally)
- $K(t) = 1$ – mean value (modulo a constant)

Overview of results

Previous work

Modeling

- An impulsive delay-free model similar to the Goodwin—Smith hormonal oscillator : *Automatica*, 2009.
- An impulsive model with a "small" time delay, FD-reducibility: *Proc. CDC*, 2012. Journal version: *IEEE Trans. Autom. Contr.*, March, 2014.
- An impulsive model with a "large" time delay: *Automatica*, June, 2014; ECC 2014; IFAC WC 2014.
- Distributed time delays: *Proc. CDC*, Los Angeles, CA, 2014.

Overview of results

Previous work

Modeling

- An impulsive delay-free model similar to the Goodwin—Smith hormonal oscillator : *Automatica*, 2009.
- An impulsive model with a "small" time delay, FD-reducibility: *Proc. CDC*, 2012. Journal version: *IEEE Trans. Autom. Contr.*, March, 2014.
- An impulsive model with a "large" time delay: *Automatica*, June, 2014; ECC 2014; IFAC WC 2014.
- Distributed time delays: *Proc. CDC*, Los Angeles, CA, 2014.

Identification

- Time delay estimation from impulse response: *Automatica*, 2012.
- Computational Models in Life Sciences, Sydney, Australia, November 2013; Book chapter in "Signal and Image Analysis for Biomedical and Life Sciences", Springer, 2014.

Overview of results

Previous work

Modeling

- An impulsive delay-free model similar to the Goodwin—Smith hormonal oscillator : *Automatica*, 2009.
- An impulsive model with a "small" time delay, FD-reducibility: *Proc. CDC*, 2012. Journal version: *IEEE Trans. Autom. Contr.*, March, 2014.
- An impulsive model with a "large" time delay: *Automatica*, June, 2014; ECC 2014; IFAC WC 2014.
- Distributed time delays: *Proc. CDC*, Los Angeles, CA, 2014.

Identification

- Time delay estimation from impulse response: *Automatica*, 2012.
- Computational Models in Life Sciences, Sydney, Australia, November 2013; Book chapter in "Signal and Image Analysis for Biomedical and Life Sciences", Springer, 2014.

Observation

- Observer for the impulsive delay-free model: *Automatica*, 2011.
- Observer for the impulsive time-delay model: *Proc. MTNS*, July, 2014.

Time-delay system structure

FD-reducible systems

Consider a linear time-delay system

$$\begin{aligned} \frac{dx}{dt} &= A_0 x(t) + A_1 x_\tau(t), \\ x_\tau(t) &= \int_0^\tau K(s) x(t-s)\, ds, \end{aligned} \tag{4}$$

$x(t) \in \mathbb{R}^p$, $A_0, A_1 \in \mathbb{R}^{p\times p}$, $\tau = \text{const} > 0$,
$x(t) = \phi(t)$, $-\tau \leqslant t < 0$.

Time-delay system structure

FD-reducible systems

Consider a linear time-delay system

$$\begin{aligned} \frac{dx}{dt} &= A_0 x(t) + A_1 x_\tau(t), \\ x_\tau(t) &= \int_0^\tau K(s) x(t-s)\, ds, \end{aligned} \tag{4}$$

$x(t) \in \mathbb{R}^p$, $A_0, A_1 \in \mathbb{R}^{p\times p}$, $\tau = \text{const} > 0$,
$x(t) = \phi(t)$, $-\tau \leqslant t < 0$.

Definition

Time-delay linear system (4) is called finite-dimension reducible (FD-reducible) if there exists a constant matrix $D \in \mathbb{R}^{p\times p}$ such that any solution $x(t)$ of (4) defined for $t \geqslant 0$ satisfies the linear differential equation

$$\frac{dx}{dt} = Dx \quad \text{for} \quad t \geqslant \tau.$$

Time-delay system structure

Conditions for FD-reducibility: the linear chain trick

For a square matrix A, introduce the matrix function

$$G_\tau(A) = \int_0^\tau K(s)\mathrm{e}^{-As}\,ds.$$

Theorem

FD-reducibility is equivalent to any of the statements (i), (ii):
(i) The matrix coefficients satisfy

$$A_1 A_0^k A_1 = 0 \quad \textit{for all} \quad k = 0, 1, \ldots, p-1.$$

(ii) There exists an invertible $p \times p$ matrix S such that

$$S^{-1}A_0 S = \begin{bmatrix} U & 0 \\ W & V \end{bmatrix}, \quad S^{-1}A_1 S = \begin{bmatrix} 0 & 0 \\ \bar{W} & 0 \end{bmatrix},$$

where U, V are square and the sizes of W and $\bar{W}$ are equal.
Moreover, $D = A_0 + A_1 G_\tau(A_0)$.

Time-delay impulsive Goodwin oscillator

System equations

Consider a generalization for $x(t) \in \mathbb{R}^p$ of the impulsive time-delay Goodwin-Smith model:

$$\frac{dx}{dt} = A_0 x(t) + A_1 x_\tau(t), \qquad y = Cx,$$

$$x_\tau(t) = \int_0^\tau K(s) x(t-s)\, ds,$$

$$t_{n+1} = t_n + T_n, \qquad x(t_n^+) = x(t_n^-) + \lambda_n B,$$

$$T_n = \Phi(y(t_n)), \qquad \lambda_n = F(y(t_n)).$$

Here $t_0 = 0$, B is a column and C is a row such that $CB = 0$. Let the functions $\Phi(\cdot)$, $F(\cdot)$ be continuously differentiable and satisfy

$$0 < \Phi_1 \leqslant \Phi(\cdot) \leqslant \Phi_2, \quad 0 < F_1 \leqslant F(\cdot) \leqslant F_2, \quad \inf_y \Phi(y) > \tau$$

for some constants $\Phi_i, F_i, i = 1, 2$.

Time-delay impulsive Goodwin oscillator

Impulse-to-impulse map $Q(\cdot)$

Introduce the notation $\bar{x}_n = x(t_n^-)$.

Theorem

Assume that $G_\tau(A_0)$ is nonsingular and the continuous part of the system is FD-reducible. Then any solution $x(t)$ satisfies for $n \geqslant 1$ the recursion

$$\bar{x}_{n+1} = Q(\bar{x}_n), \tag{5}$$

where

$$Q(x) = \mathrm{e}^{D\Phi(Cx)} \left[x + F(Cx)\, G_\tau(D)\, G_\tau(A_0)^{-1} B \right]. \tag{6}$$

The initial values $\bar{x}_0$, $\bar{x}_1$ are defined by the initial function $\phi(t)$ as follows

$$\bar{x}_0 = \phi(0), \quad \bar{x}_1 = \mathrm{e}^{D(T_0-\tau)} x(\tau),$$

where $x(\tau)$ can be computed by solving the linear equation

$$\frac{dx}{dt} = \hat{A}(t)x(t) + A_1 \int_t^\tau K(s)\phi(t-s)\, ds \tag{7}$$

for $0 \leqslant t \leqslant \tau$ with $x(0) = \bar{x}_0 + \lambda_0 B$, $\hat{A}(t) = A_0 + A_1 \int_0^t K(s)\mathrm{e}^{-A_0 s} ds$.

Time-delay impulsive Goodwin oscillator

Impulse-to-impulse map $Q(\cdot)$

Important observation

- The mapping $Q(\cdot)$ is smooth for small time delays, i.e. $\inf_y \Phi(y) > \tau$
- Similar mappings for large time delays are only piecewise smooth

Time-delay impulsive Goodwin oscillator

Relation to pseudo-differential operators

The finite-memory convolution

$$x_\tau(t) = \int_0^\tau K(s)x(t-s)\,ds$$

can be seen as a pseudo-differential operator acting on the continuous state vector $x(t)$ In Laplace domain

$$X_\tau(s) = p_\tau(s)X(s),$$

where the pseudo-differential operator is given by its symbol (the transfer function)

$$p_\tau(s) = \int_0^\tau K(\theta)e^{-\theta s}\,d\theta.$$

Now, it is apparent that the following equality holds

$$G_\tau(A) = p_\tau(s)|_{s=A}$$

Time-delay impulsive Goodwin oscillator

Relation to pseudo-differential operators: exponential kernel function

$$x_\tau(t) = \int_0^\tau K(\theta)x(t-\theta)\,d\theta, \quad K(\theta) = \mathrm{e}^{-\alpha\theta},$$

where $\alpha \geqslant 0$.

$$p_\tau(s) = \frac{1-\mathrm{e}^{(s+\alpha)\tau}}{s+\alpha}$$

If $-\alpha \notin \sigma(A)$, then

$$G_\tau(A) = p_\tau(s)|_{s=A} = (A+\alpha I)^{-1}\left(I - \mathrm{e}^{(A+\alpha I)\tau}\right),$$

Time-delay impulsive Goodwin oscillator

Relation to pseudo-differential operators: pointwise time delay

For a similar impulsive system with a pointwise delay

$$\frac{dx}{dt} = A_0 x(t) + A_1 x(t-\tau),$$

the discrete impulse-to-impulse map takes the form

$$Q(x) = \mathrm{e}^{\hat{D}\Phi(Cx)} \left[x + F(Cx)\, \mathrm{e}^{-\hat{D}\tau} \mathrm{e}^{A_0 \tau} B \right],$$

with $\hat{D} = A_0 + A_1 \mathrm{e}^{-A_0 \tau}$.

This is can be readily derived from (6) as a special case with the transfer function for the pointwise delay, i.e.

$$p_\tau(s) = e^{-s\tau}|_{s=A} = e^{-A\tau}.$$

Time-delay impulsive Goodwin oscillator

Relation to pseudo-differential operators: pointwise time delay

For a similar impulsive system with a pointwise delay

$$\frac{dx}{dt} = A_0 x(t) + A_1 x(t-\tau),$$

the discrete impulse-to-impulse map takes the form

$$Q(x) = \mathrm{e}^{\hat{D}\Phi(Cx)} \left[x + F(Cx)\, \mathrm{e}^{-\hat{D}\tau} \mathrm{e}^{A_0 \tau} B \right],$$

with $\hat{D} = A_0 + A_1 \mathrm{e}^{-A_0 \tau}$.

This is can be readily derived from (6) as a special case with the transfer function for the pointwise delay, i.e.

$$p_\tau(s) = e^{-s\tau}|_{s=A} = e^{-A\tau}.$$

- The result applies to a broad class of pseudo-differential operators

Time-delay impulsive Goodwin oscillator

Solutions of the hybrid system

Any solution $x(t)$ of impulsive Goodwin oscillator (5) corresponds to a sequence $(\bar{x}_n, t_n)$, $n = 0, 1, \ldots$.

Consider the converse problem.

Time-delay impulsive Goodwin oscillator

Solutions of the hybrid system

Any solution $x(t)$ of impulsive Goodwin oscillator (5) corresponds to a sequence $(\bar{x}_n, t_n)$, $n = 0, 1, \ldots$.

Consider the converse problem.

Proposition

Consider a sequence $(\bar{x}_n, t_n)$, $n = 0, 1, \ldots$, *such that* $t_0 = 0$ *and*

$$t_{n+1} = t_n + \Phi(C\bar{x}_n), \quad \bar{x}_{n+1} = Q(\bar{x}_n) \tag{8}$$

where $Q(\cdot)$ *is given by* (6). *Then a solution* $x(t)$ *satisfying* (5) *and such that* $x(t_n^-) = \bar{x}_n$, $n = 0, 1, \ldots$, *can be uniquely reconstructed for all* $t \geqslant \tau$. *As for the continuation of the solution* $x(t)$ *to the interval* $(0, \tau)$, *the knowledge of the initial function* $\phi(t)$, $-\tau \leqslant t < 0$, *is required.*

Impulsive Goodwin oscillator
Periodic solutions

Let $\bar{x}_n = x(t_n^-)$, where $x(t)$ is a solution of the impulsive (hybrid) system.

The sequence $\{\bar{x}_k\}$ is an m-periodic solution (m-cycle) if

$$\bar{x}_{k+1} = Q(\bar{x}_k), \quad k = 0, 1, \ldots, m-1,$$

where $\bar{x}_m = \bar{x}_0$, $\bar{x}_{m+1} = \bar{x}_1$.

Lemma

Suppose that a sequence $\{\bar{x}_k\}$ is m-periodic. Then there exists an initial function $\varphi(t)$, $-\tau \leqslant t \leqslant 0$, such that the solution $x(t)$ with the initial condition $x(t) = \varphi(t)$, $-\tau \leqslant t \leqslant 0$, is T-periodic with

$$T = T_0 + T_1 + \ldots + T_{m-1}, \quad T_k = \Phi(C\bar{x}_k).$$

and satisfies $x(t_k^-) = \bar{x}_k$, $k = 0, \ldots$.

Impulsive Goodwin oscillator

Periodic solutions

Let $\bar{x}_n = x(t_n^-)$, where $x(t)$ is a solution of the impulsive (hybrid) system.

The sequence $\{\bar{x}_k\}$ is an m-periodic solution (m-cycle) if

$$\bar{x}_{k+1} = Q(\bar{x}_k), \quad k = 0, 1, \ldots, m-1,$$

where $\bar{x}_m = \bar{x}_0$, $\bar{x}_{m+1} = \bar{x}_1$.

Lemma

Suppose that a sequence $\{\bar{x}_k\}$ is m-periodic. Then there exists an initial function $\varphi(t)$, $-\tau \leqslant t \leqslant 0$, such that the solution $x(t)$ with the initial condition $x(t) = \varphi(t)$, $-\tau \leqslant t \leqslant 0$, is T-periodic with

$$T = T_0 + T_1 + \ldots + T_{m-1}, \quad T_k = \Phi(C\bar{x}_k).$$

and satisfies $x(t_k^-) = \bar{x}_k$, $k = 0, \ldots$.

Piecewise continuous initial functions have to be considered for the case of large delays.

Impulsive Goodwin oscillator
Simulations

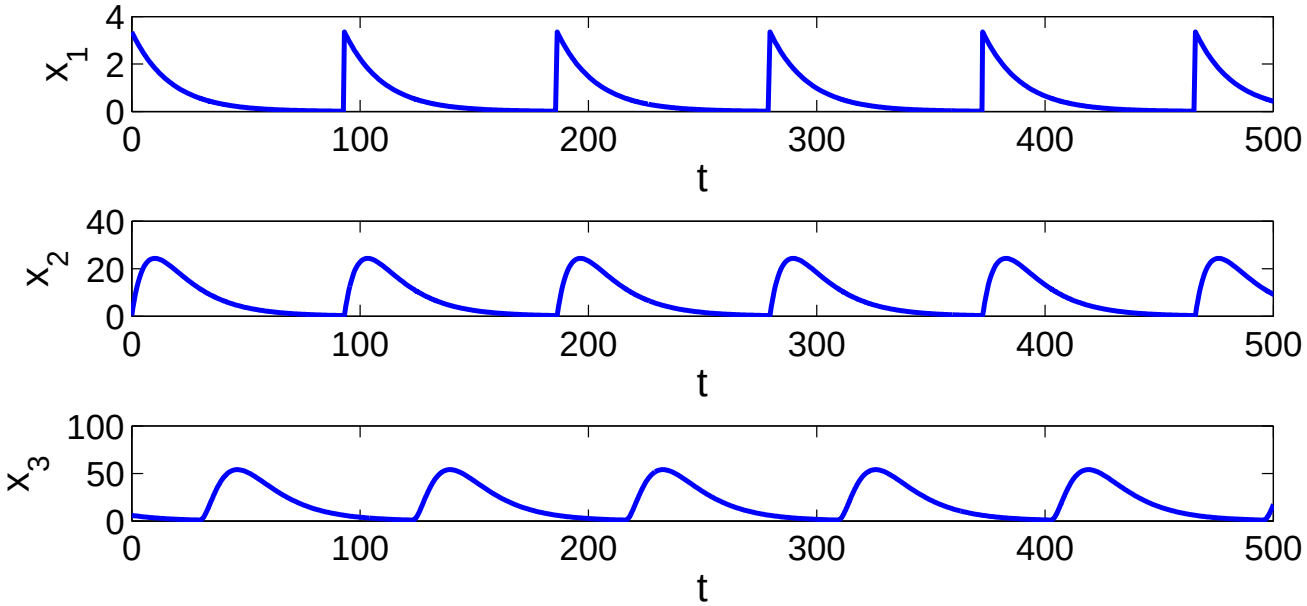

Figure: Simulated 1-cycle of the Smith Te model

Impulsive Goodwin oscillator
Simulations

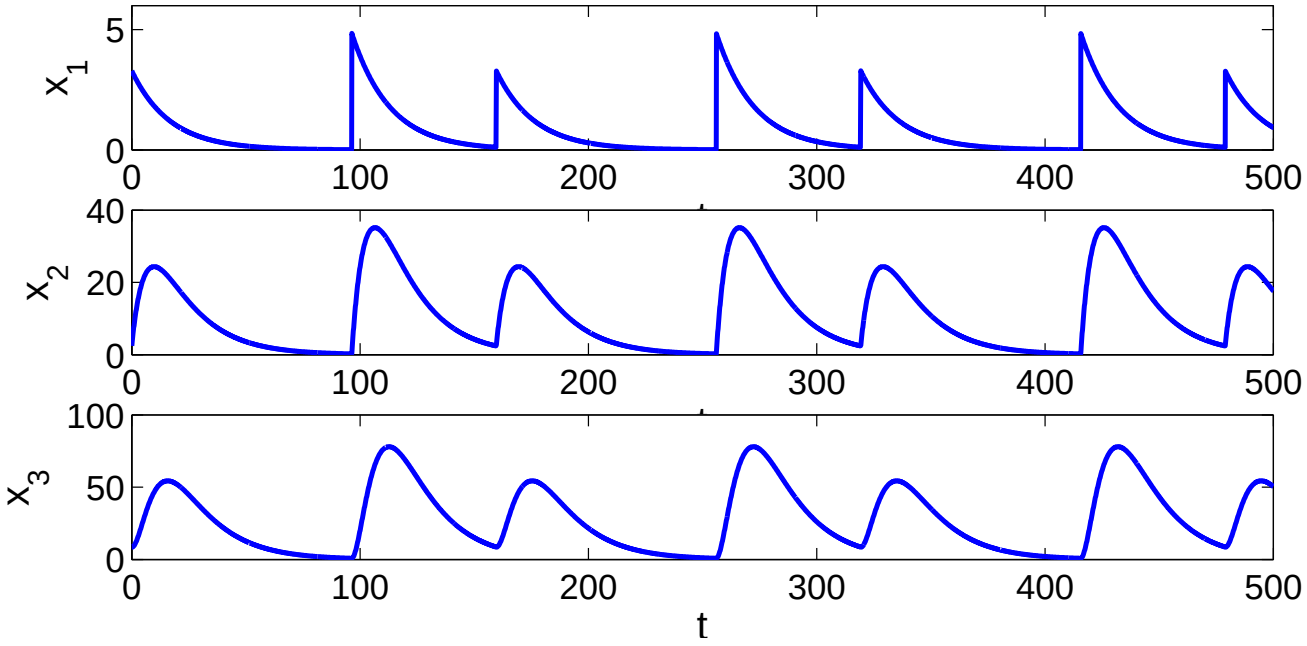

Figure: Simulated 2-cycle of the Smith Te model

Impulsive Goodwin oscillator
Simulations

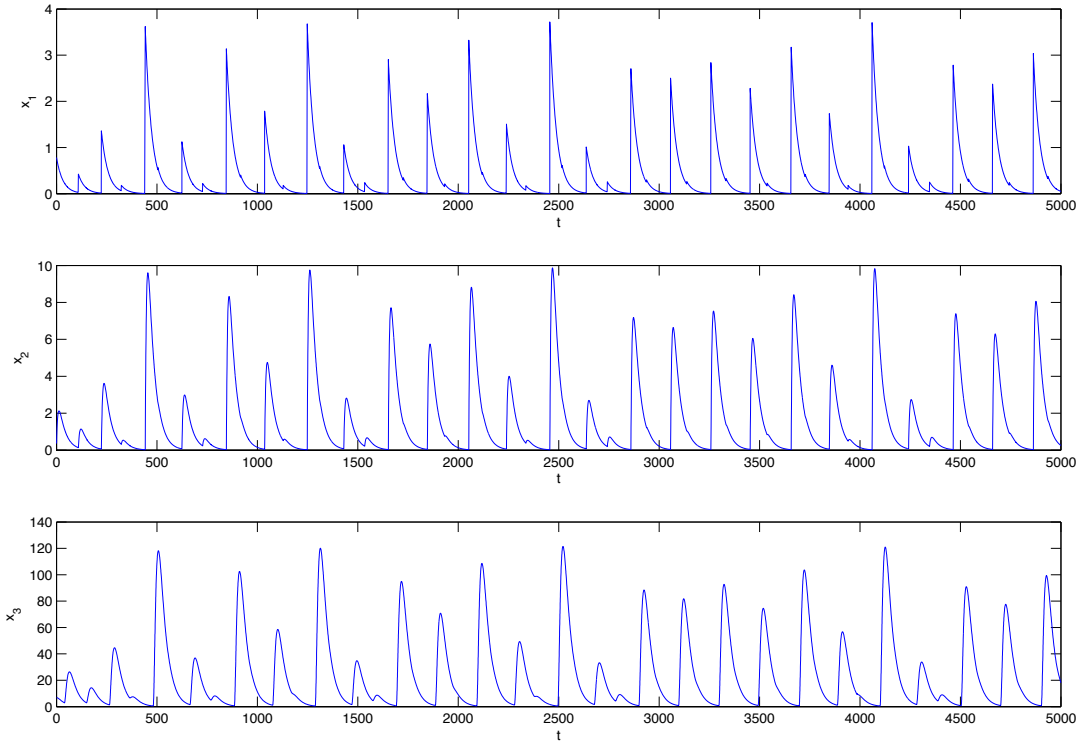

Figure: Simulated chaotic solution of the Smith Te model

Te regulation

Mathematical model: continuous part

$$\frac{dx_1}{dt} = -b_1 x_1, \quad \frac{dx_2}{dt} = -b_2 x_2 + g_1 x_1,$$
$$\frac{dx_3}{dt} = -b_2 x_3 + g_2 x_{2,\tau}(t).$$

$$x_{2,\tau}(t) = \int_0^\tau K(\theta) x_2(t-\theta)\, d\theta, \quad K(\theta) = \mathrm{e}^{-\alpha\theta}/\beta,$$

where $\alpha \geqslant 0$, $\beta > 0$. For normalization:

$$\beta = \int_0^\tau \mathrm{e}^{-\alpha\theta} d\theta = \begin{cases} \tau, & \alpha = 0, \\ (1 - \mathrm{e}^{-\alpha\tau})/\alpha, & \alpha > 0 \end{cases}$$

Here x_1 is the concentration of GnRH, x_2 is the concentration of LH, and x_3 is the concentration of Te. The values b_i, $i = 1, 2, 3$ correspond to the half-life time of GnRH, LH and Te $b_1 = 0.4$, $b_2 = 0.01$, $b_3 = 0.046$, $g_1 = 2$, $g_2 = 4$.

Te regulation

Mathematical model: discrete part

Pulse-modulated part:

$$x_1(t_n^+) = x_1(t_n^-) + \lambda_n, \quad t_{n+1} = t_n + T_n,$$

$$\lambda_n = F(x_3(t_n)), \quad T_n = \Phi(x_3(t_n)), \tag{9}$$

$$\Phi(y) = k_1 + k_2 \frac{(y/h)^p}{1 + (y/h)^p}, \quad F(y) = k_3 + \frac{k_4}{1 + (y/h)^p},$$

Parameters $k_1 = 50, k_2 = 220, k_3 = 1.5, k_4 = 5, h = 100,\ p = 4$.

Small delays: $\inf_y \Phi(y) > \tau$, $\inf_y \Phi(y) = 50$.

Te regulation

Mathematical model: bifurcation analysis

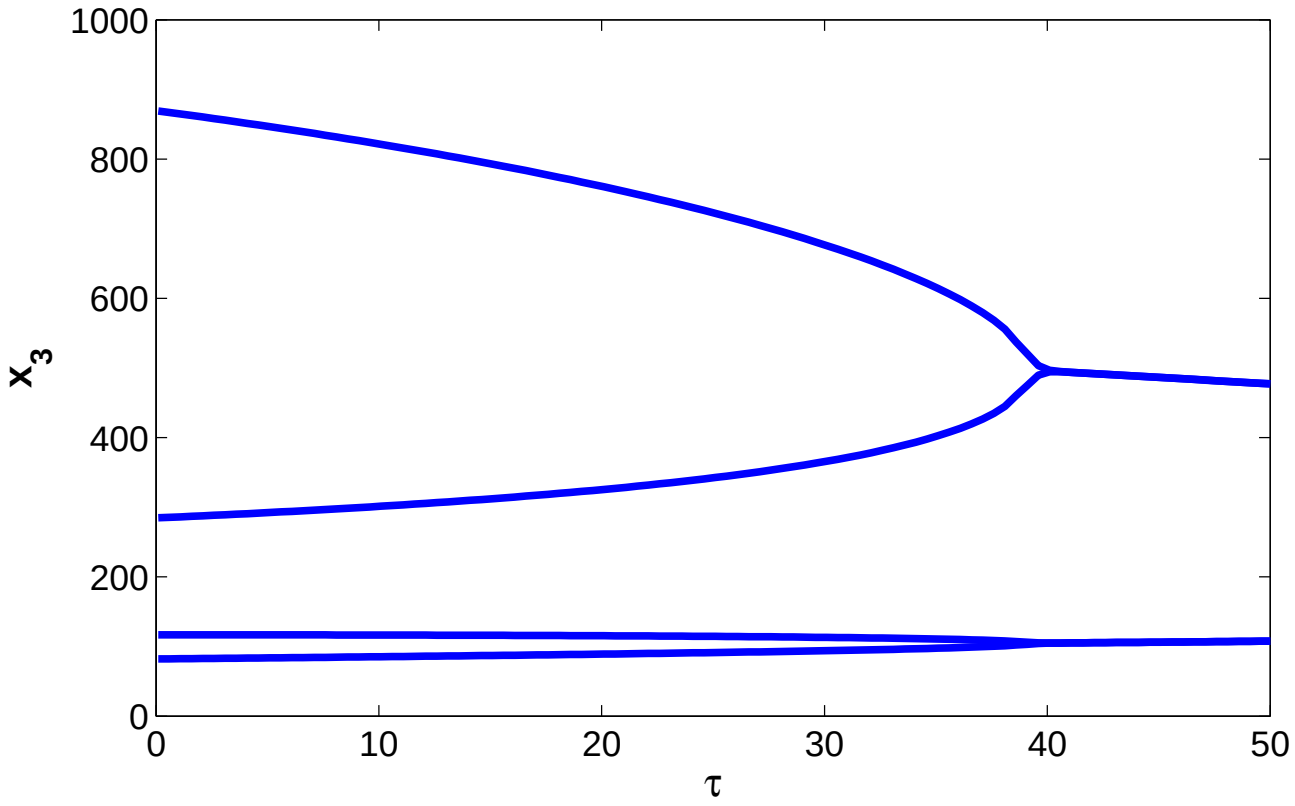

Figure: Bifurcation diagram for $\alpha = 0$ (mean value). Te value at modulation time, $\tau \in [0, 50]$

Te regulation

Mathematical model: bifurcation analysis

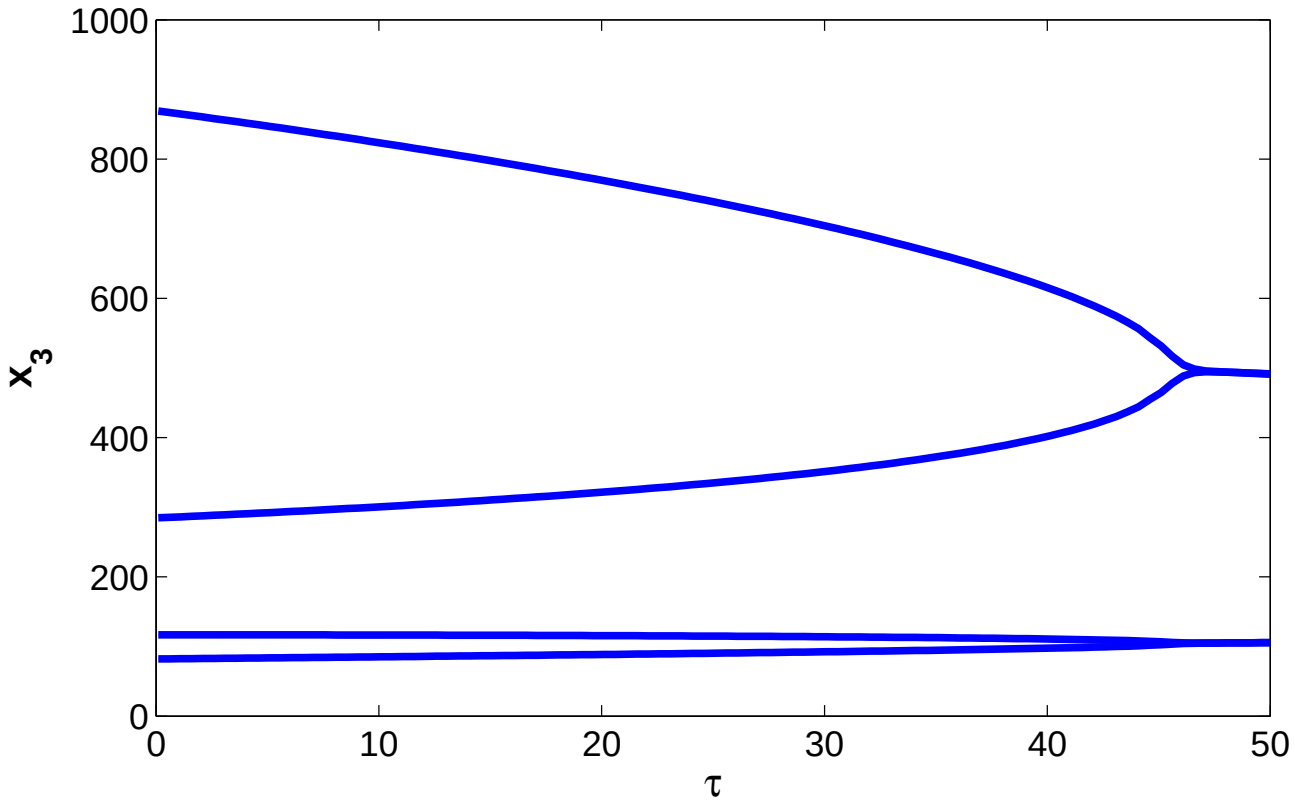

Figure: Bifurcation diagram for $\alpha = 0.02$ (light attenuation). Te value at modulation time, $\tau \in [0, 50]$

Te regulation

Mathematical model: bifurcation analysis

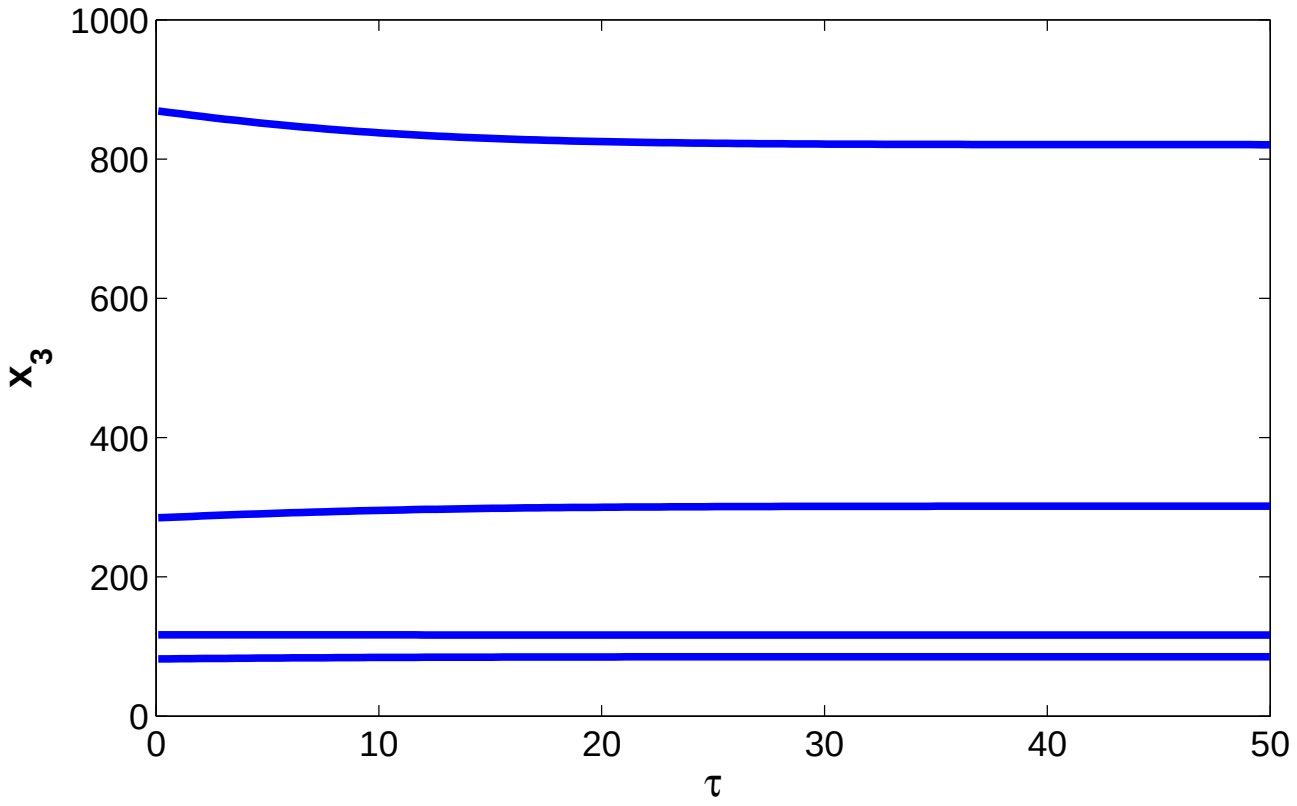

Figure: Bifurcation diagram for $\alpha = 0.2$ (heavy attenuation). Te value at modulation time, $\tau \in [0, 50]$

Summary

1. An impulsive feedback regulation model of an endocrine system with a distributed time-delay is considered.

Summary

1. An impulsive feedback regulation model of an endocrine system with a distributed time-delay is considered.
2. The model dynamics are represented by a discrete mapping describing the propagation of the system states from one firing of the impulsive feedback to the next one.

Summary

1. An impulsive feedback regulation model of an endocrine system with a distributed time-delay is considered.
2. The model dynamics are represented by a discrete mapping describing the propagation of the system states from one firing of the impulsive feedback to the next one.
3. The discrete mapping is smooth for small time delays, i.e. less than the least interval between the feedback impulses.

Summary

1. An impulsive feedback regulation model of an endocrine system with a distributed time-delay is considered.
2. The model dynamics are represented by a discrete mapping describing the propagation of the system states from one firing of the impulsive feedback to the next one.
3. The discrete mapping is smooth for small time delays, i.e. less than the least interval between the feedback impulses.
4. The discrete mapping is piecewise smooth for large time delays.

Summary

1. An impulsive feedback regulation model of an endocrine system with a distributed time-delay is considered.
2. The model dynamics are represented by a discrete mapping describing the propagation of the system states from one firing of the impulsive feedback to the next one.
3. The discrete mapping is smooth for small time delays, i.e. less than the least interval between the feedback impulses.
4. The discrete mapping is piecewise smooth for large time delays.
5. The delay-induced dynamical phenomena arising due to the presence of the time delay in closed loop of system are studied by bifurcation analysis

Summary

1. An impulsive feedback regulation model of an endocrine system with a distributed time-delay is considered.
2. The model dynamics are represented by a discrete mapping describing the propagation of the system states from one firing of the impulsive feedback to the next one.
3. The discrete mapping is smooth for small time delays, i.e. less than the least interval between the feedback impulses.
4. The discrete mapping is piecewise smooth for large time delays.
5. The delay-induced dynamical phenomena arising due to the presence of the time delay in closed loop of system are studied by bifurcation analysis
6. For larger time delays, the hybrid model dynamics exhibit complex nonlinear phenomena such as bistability, persistence border-collision, and quasiperiodic solutions that are not observed for small time delays

Te regulation
Two-parameter bifurcation diagram

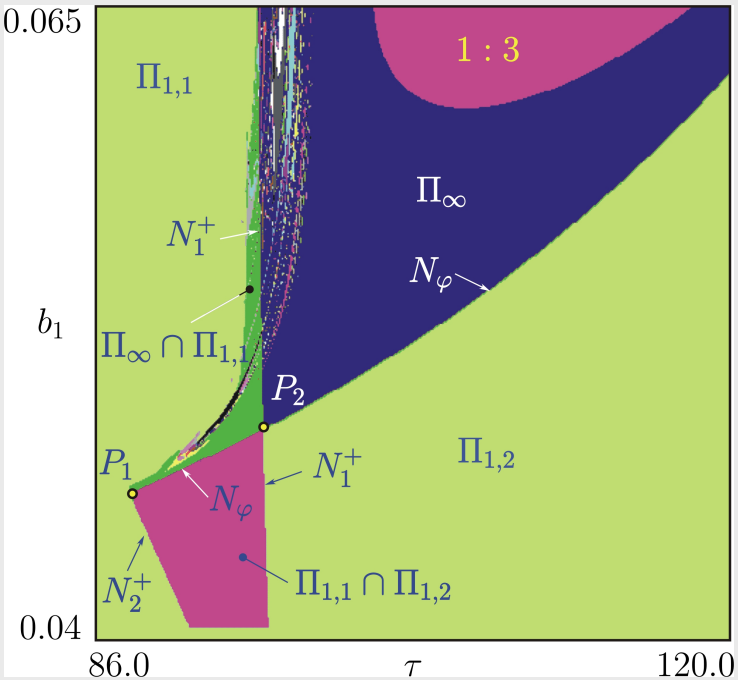

Fig. 1. Two-parameter bifurcation diagram in the parameter plane (τ, b_1). Here N_φ is a Neimark-Sacker bifurcation curve. N_1^+ and N_2^+ are the saddle-node bifurcation curves. The curves N_φ and N_2^+ are supported by the point P_1 of codimension two. $\Pi_{1,1}$ and $\Pi_{1,2}$ are the domains of existence for the 1-cycles. $1:3$ is the period-3 resonance tongue. Regions with quasiperiodic and chaotic dynamics are indicated by Π_∞. $\Pi_{1,1} \cap \Pi_{1,2}$ and $\Pi_\infty \cap \Pi_{1,1}$ denote regions of multistability.

Te regulation

Bistability and hysteretic transitions

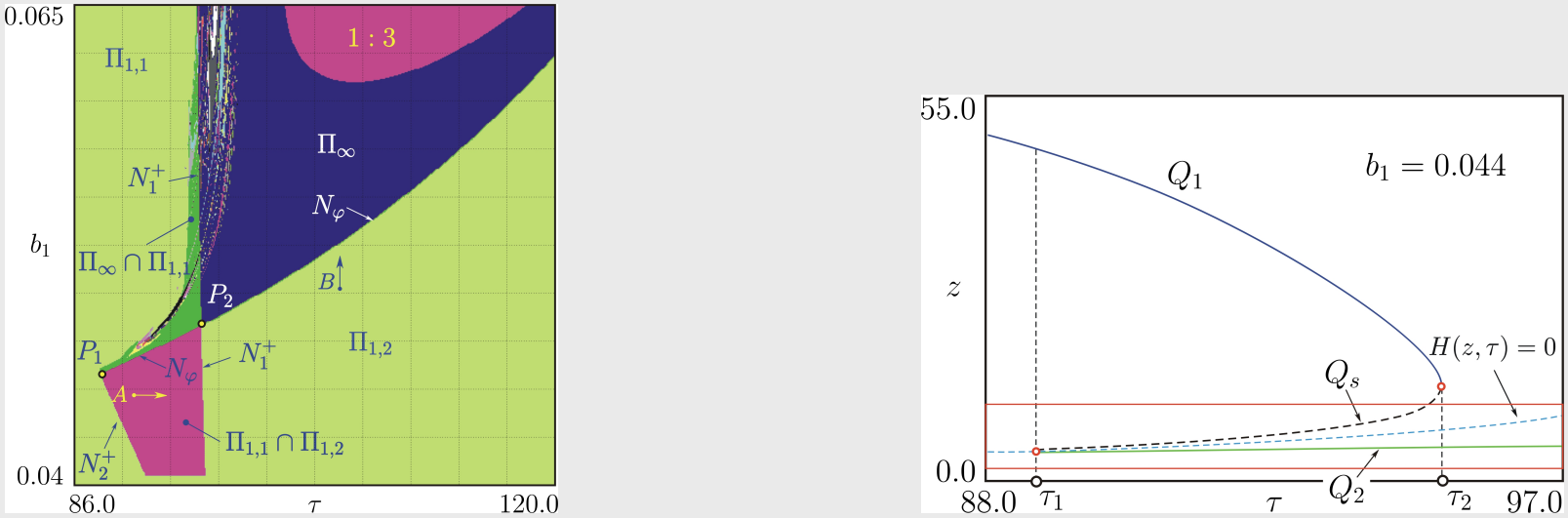

Fig. 2. (a) Bifurcation diagram in the parameter plane (τ, b_1). (b) Bifurcation diagram for $b_1 = 0.044$ along the direction A in (a). Two stable 1-cycles of different types coexist (bistability). This coexistence can give rise to hysteretic transitions on the boundaries N_1^+ and N_2^+ of the region $\Pi_{1,1} \cap \Pi_{1,2}$. Here τ_1 and τ_2 are the saddle-node bifurcation points. Q_1 is the stable fixed point in Ω_1, Ω_2 (green line) is the stable fixed point of another type $Q_2 \in \Omega_4$ and Q_s is the saddle period-1 cycle ($Q_s \in \Omega_1$). The blue dashed line: $H(z, \tau) = \Phi(z) - \tau = 0$.

- For $0 < \tau < \tau_1$, the mapping Q has a single stable fixed point Q_1 (1-cycle).
- The 1-cycle Q_1 undergoes a saddle-node bifurcation at $\tau = \tau_2$ in which the stable node 1-cycle Q_1 merges with a saddle 1-cycle $Q_s \in \Omega_1$ and disappears.
- The saddle cycle Q_s can be followed backwards in the bifurcation diagram (black dashed curve) to a point $\tau = \tau_1$, where it undergoes a second saddle-node bifurcation, and a new stable 1-cycle is born.